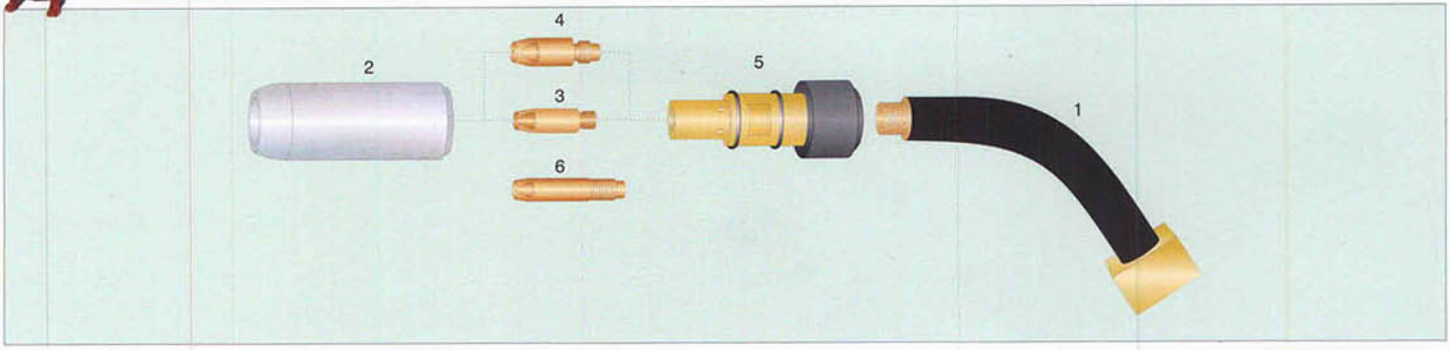

ITEM	Part No	DESCRIPTION	ORIGINAL REF.		PACK
1	11.06.RB.25	**Corpo torcia RB 25-RB 28** - Swan neck RB 25-RB 28	116.103.108		
	11.06.RB.32	**Corpo torcia RB 32 -RB 36** - Swan neck RB 32 -RB 36	116.103.114		
	11.06.RB.40	**Corpo torcia RB 40** - Swan neck RB 40	116.103.115		
2	11.02.RB.25	**Ugello gas Ø 13 RB 25** - Gas nozzle Ø 13 RB 25	179.105.103		10
	11.02.RB.28	**Ugello gas Ø 15 RB 28** - Gas nozzle Ø 15 RB 28	179.105.110		10
	11.02.RB.32	**Ugello gas Ø 16 RB 32-42** - Gas nozzle Ø 16 RB 32-RB42 RH451-352	179.105.106		10
	11.02.RB.36	**Ugello gas Ø 16 RB 36** - Gas nozzle Ø 16 RB 36	179.105.115		10
	11.02.RB.40	**Ugello gas Ø 17 RB 40** - Gas nozzle Ø 17 RB 40 RH502	179.105.113		10
	05.02.47	**Ugello gas Ø 18 RB 52** - Gas nozzle Ø 18 RB 52 CEA-C450-C47-48	179.105.111		10
5	11.05.RB.25	**Diffusore gas RB 25** - Gas diffuser RB 25	118.102.106		10
	11.05.RB.28	**Diffusore gas RB 28** - Gas diffuser RB 28	118.102.111		10
	11.05.RB.32	**Diffusore gas RB 32-36** - Gas diffuser RB 32-36	118.102.119		10
	11.05.RB.40	**Diffusore gas RB 40** - Gas diffuser RB 40	118.102.122		10
3	02.01.25.08	**Punta guidafilo M6X28 Ø 0,8** - Contact tip M6X28 Ø 0,8	147.020.208		100
	02.01.25.10	**Punta guidafilo M6X28 Ø 1,0** - Contact tip M6X28 Ø 1,0	147.020.210		100
	02.01.25.12	**Punta guidafilo M6X28 Ø 1,2** - Contact tip M6X28 Ø 1,2	147.020.212		100
	02.01.25.08H	**Punta guidafilo CuCrZr M6X28 Ø 0,8** - Contact tip CuCrZr M6X28 Ø 0,8	147.010.208		100
	02.01.25.10H	**Punta guidafilo CuCrZr M6X28 Ø 1,0** - Contact tip CuCrZr M6X28 Ø 1,0	147.010.210		100
	02.01.25.12H	**Punta guidafilo CuCrZr M6X28 Ø 1,2** - Contact tip CuCrZr M6X28 Ø 1,2	147.010.212		100
4	02.01.M83008	**Punta guidafilo M8X30 Ø 0,8** - Contact tip M8X30 Ø 0,8	147.020.308		100
	02.01.M83010	**Punta guidafilo M8X30 Ø 1,0** - Contact tip M8X30 Ø 1,0	147.020.310		100
	02.01.M83012	**Punta guidafilo M8X30 Ø 1,2** - Contact tip M8X30 Ø 1,2	147.020.312		100
	02.01.M83016	**Punta guidafilo M8X30 Ø 1,6** - Contact tip M8X30 Ø 1,6	147.020.316		100
	02.01.M83008H	**Punta guidafilo CuCrZr M8X30 Ø 0,8** - Contact tip CuCrZr M8X30 Ø 0,8	147.010.308		100
	02.01.M83010H	**Punta guidafilo CuCrZr M8X30 Ø 1,0** - Contact tip CuCrZr M8X30 Ø 1,0	147.010.310		100
	02.01.M83012H	**Punta guidafilo CuCrZr M8X30 Ø 1,2** - Contact tip CuCrZr M8X30 Ø 1,2	147.010.312		100
	02.01.M83016H	**Punta guidafilo CuCrZr M8X30 Ø 1,6** - Contact tip CuCrZr M8X30 Ø 1,6	147.010.316		100
6	04.01.M840.08	**Punta guidafilo M8X40 Ø 0,8** - Contact tip M8X40 Ø 0,8	147.010.108	RH.302-	100
	04.01.M840.10	**Punta guidafilo M8X40 Ø 1,0** - Contact tip M8X40 Ø 1,0	147.010.110	RH.503-	100
	04.01.M840.12	**Punta guidafilo M8X40 Ø 1,2** - Contact tip M8X40 Ø 1,2	147.010.112	RM.360-	100
	04.01.M840.14	**Punta guidafilo M8X40 Ø 1,4** - Contact tip M8X40 Ø 1,4	147.010.114	RM.652-	100
	04.01.M840.16	**Punta guidafilo M8X40 Ø 1,6** - Contact tip M8X40 Ø 1,6	147.010.116	RM.652	100
	04.01.M840.08H	**Punta guidafilo CuCrZr M8X40 Ø 0,8** - Contact tip CuCrZr M8X40 Ø 0,8	147.020.108	RH.302-	100
	04.01.M840.10H	**Punta guidafilo CuCrZr M8X40 Ø 1,0** - Contact tip CuCrZr M8X40 Ø 1,0	147.020.110	RH.503-	100
	04.01.M840.12H	**Punta guidafilo CuCrZr M8X40 Ø 1,2** - Contact tip CuCrZr M8X40 Ø 1,2	147.020.112	RM.360-	100
	04.01.M840.14H	**Punta guidafilo CuCrZr M8X40 Ø 1,4** - Contact tip CuCrZr M8X40 Ø 1,4	147.020.114	RM.652-	100
	04.01.M840.16H	**Punta guidafilo CuCrZr M8X40 Ø 1,6** - Contact tip CuCrZr M8X40 Ø 1,6	147.020.116	RM.652	100
	11.00.KTA25.3	**Kit di riparazione OA253** - Repairing Kit OA253			
	11.00.KTA25.4	**Kit di riparazione OA254** - Repairing Kit OA254			
	11.00.KTA25.5	**Kit di riparazione OA255** - Repairing Kit OA255			
	11.00.KTA28.3	**Kit di riparazione OA283** - Repairing Kit OA283			
	11.00.KTA28.4	**Kit di riparazione OA284** - Repairing Kit OA284			
	11.00.KTA28.5	**Kit di riparazione OA285** - Repairing Kit OA285			
	11.00.KTA36.3	**Kit di riparazione OA363** - Repairing Kit OA363			
	11.00.KTA36.4	**Kit di riparazione OA364** - Repairing Kit OA364			
	11.00.KTA36.5	**Kit di riparazione OA365** - Repairing Kit OA365			
	11.00.KTA40.3	**Kit di riparazione OA403** - Repairing Kit OA403			
	11.00.KTA40.4	**Kit di riparazione OA404** - Repairing Kit OA404			
	11.00.KTA40.5	**Kit di riparazione OA405** - Repairing Kit OA405			

NEW COIR S.p.A. is in no way affiliated with OCIM®. The parts advertised for sale are not genuine OCIM® parts, but are parts made for and by NEW COIR S.p.A.
Reference to OCIM® machine, torches and numbers are for your convenience only. We reserve the right to substitute genuine OCIM® parts in place of NEW COIR S.p.A. parts.

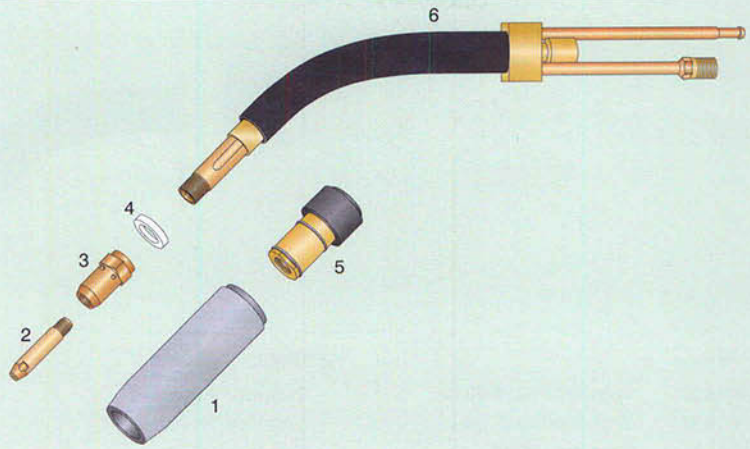

ITEM	Part No	DESCRIPTION			ORIGINAL REF.	PACK
1	11.02.RH302.15	**Ugello gas isolato Ø 15 STD**	-	Insulated gas nozzle Ø 15 STD	179.105.114	10
	11.02.RH302.12	**Ugello gas isolato Ø 12**	-	Insulated gas nozzle Ø 12	179.109.118	10
	11.02.RH302.18	**Ugello gas isolato Ø 18**	-	Insulated gas nozzle Ø 18	179.104.109	10
2	04.01.M840.08	**Punta guidafilo M8x40 Ø 0,8**	-	Contact tip M8x40 Ø 0,8	147.010.108	100
	04.01.M840.10	**Punta guidafilo M8x40 Ø 1,0**	-	Contact tip M8x40 Ø 1,0	147.010.110	100
	04.01.M840.12	**Punta guidafilo M8x40 Ø 1,2**	-	Contact tip M8x40 Ø 1,2	147.010.112	100
	04.01.M840.08H	**Punta guidafilo M8x40 CUCRZR Ø 0,8**	-	Contact tip M8x40 CUCRZR Ø 0,8	147.020.108	100
	04.01.M840.10H	**Punta guidafilo M8x40 CUCRZR Ø 1,0**	-	Contact tip M8x40 CUCRZR Ø 1,0	147.020.110	100
	04.01.M840.12H	**Punta guidafilo M8x40 CUCRZR Ø 1,2**	-	Contact tip M8x40 CUCRZR Ø 1,2	147.020.112	100
3	11.05.RH302	**Diffusore gas Cu**	-	Gas diffuser	118.103.105	10
4	11.03.RH302	**Rondella isolante**	-	Washer	151.105.107	10
5	11.33.RH302	**Portaugello**	-	Gas nozzle holder	150.112.103	
	11.55.RH302	**Anello elastico**	-	Ring	101.101.104	
6	11.06.RH302S	**Corpo torcia STD. senza portaugello**	-	Torch head without outside nozzle	-	1
	11.06.RH302	**Corpo torcia STD. con portaugello**	-	Torch head with outside nozzle	116.116.103	1
	11.07.RH302	**Tubo isolante lancia**	-	Conductor tube insulaton	140.104.130	10
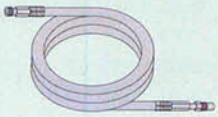	11.21.RM360.3	**Portaguaina MT.3**	-	Wire conduit mt.3	145.040.301	1
	11.21.RM360.4	**Portaguaina MT.4**	-	Wire conduit mt.4	145.040.401	1
	11.21.RM360.5	**Portaguaina MT.5**	-	Wire conduit mt.5		1
	11.24.RH503.3	**Cavo P.C. MT 3**	-	Power cable mt.3	112.050.301	1
	11.24.RH503.4	**Cavo P.C. MT 4**	-	Power cable mt.4	112.050.401	1
	11.24.RH503.5	**Cavo P.C. MT 5**	-	Power cable mt.5		1
	11.30.H01	**Corpo torcia posteriore**	-	Euro connector	142.105.121	1
	11.00.KTH302.3	**Kit di riparazione OH3023**	-	Repairing Kit OH3023		
	11.00.KTH302.4	**Kit di riparazione OH3024**	-	Repairing Kit OH3024		
	11.00.KTH302.5	**Kit di riparazione OH3025**	-	Repairing Kit OH3025		

NEW COIR S.p.A. is in no way affiliated with OCIM®. The parts advertised for sale are not genuine OCIM® parts, but are parts made for and by NEW COIR S.p.A. Reference to OCIM® machine, torches and numbers are for your convenience only. We reserve the right to substitute genuine OCIM® parts in place of NEW COIR S.p.A. parts.

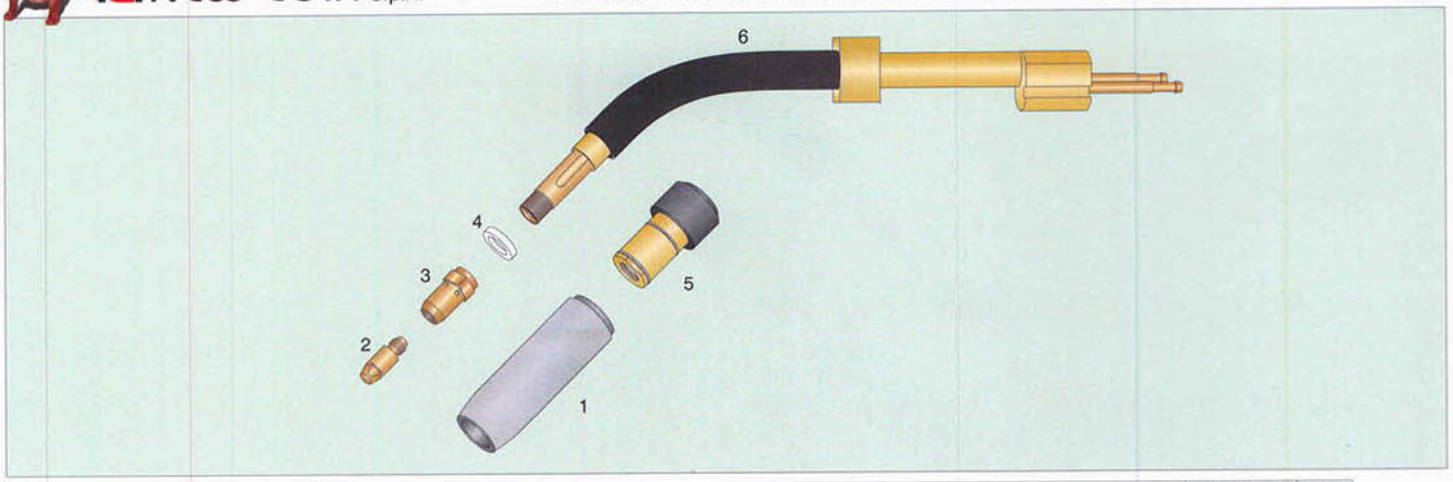

ITEM	Part No	DESCRIPTION		ORIGINAL REF.	PACK
1	11.02.RH502.17	**Ugello gas Ø 17 STD**	- Gas nozzle Ø 17 STD	179.105.113	10
	11.02.RH502.15	**Ugello gas Ø 15,5**	- Gas nozzle Ø 15,5	179.109.112	10
	11.02.RH502.21	**Ugello gas Ø 21**	- Gas nozzle Ø 21	179.104.108	10
2	02.01.M830.10	**Punta gudafilo M8x30 Ø 1,0**	- Contact tip M8x30 Ø 1,0	147.010.310	100
	02.01.M830.12	**Punta gudafilo M8x30 Ø 1,2**	- Contact tip M8x30 Ø 1,2	147.010.312	100
	02.01.M830.16	**Punta gudafilo M8x30 Ø 1,6**	- Contact tip M8x30 Ø 1,6	147.010.316	100
	02.01.M830.20	**Punta gudafilo M8x30 Ø 2,0**	- Contact tip M8x30 Ø 2,0	147.010.320	100
	02.01.M830.10H	**Punta gudafilo M8x30 CUCRZR Ø 1,0**	- Contact tip M8x30 CUCRZR Ø 1,0	147.020.310	100
	02.01.M830.12H	**Punta gudafilo M8x30 CUCRZR Ø 1,2**	- Contact tip M8x30 CUCRZR Ø 1,2	147.020.312	100
	02.01.M830.16H	**Punta gudafilo M8x30 CUCRZR Ø 1,6**	- Contact tip M8x30 CUCRZR Ø 1,6	147.020.316	100
	02.01.M830.20H	**Punta gudafilo M8x30 CUCRZR Ø 2,0**	- Contact tip M8x30 CUCRZR Ø 2,0	147.020.320	100
3	11.05.RH503	**Diffusore gas Cu**	- Gas diffuser	118.103.106	10
4	11.03.RH503	**Rondella isolante**	- Washer	151.105.106	10
5	11.33.RH503	**Portaugello**	- Gas nozzle holder	150.112.102	5
	11.55.RH503	**Anello elastico**	- Ring	101.101.103	10
6	11.06.RH502S	**Corpo torcia STD. senza portaugello**	- Torch head without outside nozzle		1
	11.06.RH502	**Corpo torcia STD. con portaugello**	- Torch head with outside nozzle	116.116.102	1
	11.07.RH502	**Tubo isolante lancia**	- Conductor tube insulation	140.104.108	10
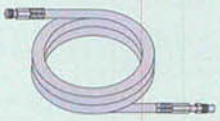	11.21.RM652.3	**Portaguaina MT. 3**	- Wire conduit MT.3	145.030.301	1
	11.21.RM652.4	**Portaguaina MT. 4**	- Wire conduit MT.4	145.030.401	1
	11.21.RM652.5	**Portaguaina MT. 5**	- Wire conduit MT.5		1
	11.24.RM652.3	**Cavo P.C. MT. 3**	- Power cable MT.3	112.020.301	1
	11.24.RM652.4	**Cavo P.C. MT. 4**	- Power cable MT.4	112.020.401	1
	11.24.RM652.5	**Cavo P.C. MT. 5**	- Power cable MT.5		1
	11.30.H03	**Corpo torcia posteriore**	- Euro connector	142.105.119	1
	11.00.KTH502.3	**Kit di riparazione OH5023**	- Repairing Kit OH5023		
	11.00.KTH502.4	**Kit di riparazione OH5024**	- Repairing Kit OH5024		
	11.00.KTH502.5	**Kit di riparazione OH5025**	- Repairing Kit OH5025		

NEW COIR S.p.A. is in no way affiliated with OCIM®. The parts advertised for sale are not genuine OCIM® parts, but are parts made for and by NEW COIR S.p.A.
Reference to OCIM® machine, torches and numbers are for your convenience only. We reserve the right to substitute genuine OCIM® parts in place of NEW COIR S.p.A. parts.

SPARE PARTS SUITABLE FOR OCIM® **RH 503**

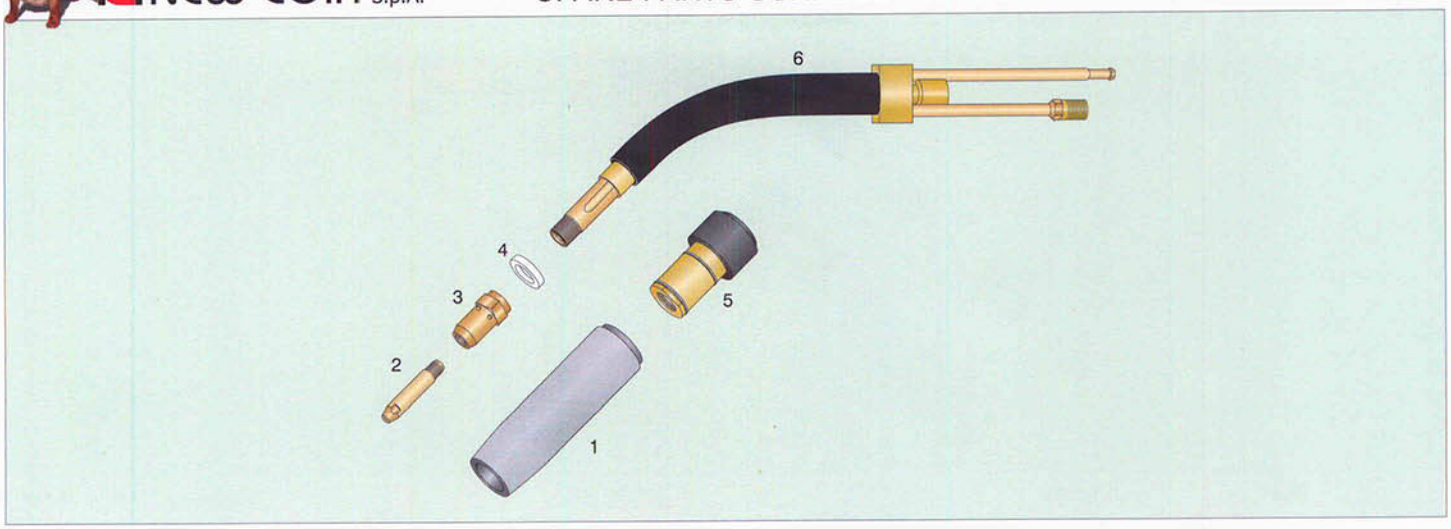

ITEM	Part No	DESCRIPTION			ORIGINAL REF.	PACK
1	11.02.RH503.17	**Ugello gas Ø 17 STD**	-	Gas nozzle Ø 17 STD	179.105.121	10
	11.02.RH503.15	**Ugello gas Ø 15**	-	Gas nozzle Ø 15	179.109.110	10
	11.02.RH503.21	**Ugello gas Ø 21**	-	Gas nozzle Ø 21	179.104.113	10
2	04.01.M840.08	**Punta guidafilo M8x40 Ø 0,8**	-	Contact tip M8x40 Ø 0,8	147.010.108	100
	04.01.M840.10	**Punta guidafilo M8x40 Ø 1,0**	-	Contact tip M8x40 Ø 1,0	147.010.110	100
	04.01.M840.12	**Punta guidafilo M8x40 Ø 1,2**	-	Contact tip M8x40 Ø 1,2	147.010.112	100
	04.01.M840.16	**Punta guidafilo M8x40 Ø 1,6**	-	Contact tip M8x40 Ø 1,6	147.010.116	100
	04.01.M840.20	**Punta guidafilo M8x40 Ø 2,0**	-	Contact tip M8x40 Ø 2,0	147.010.120	100
	04.01.M840.08H	**Punta guidafilo M8x40 CUCRZR Ø 0,8**	-	Contact tip M8x40 CUCRZR Ø 0,8	147.020.108	100
	04.01.M840.10H	**Punta guidafilo M8x40 CUCRZR Ø 1,0**	-	Contact tip M8x40 CUCRZR Ø 1,0	147.020.110	100
	04.01.M840.12H	**Punta guidafilo M8x40 CUCRZR Ø 1,2**	-	Contact tip M8x40 CUCRZR Ø 1,2	147.020.112	100
	04.01.M840.16H	**Punta guidafilo M8x40 CUCRZR Ø 1,6**	-	Contact tip M8x40 CUCRZR Ø 1,6	147.020.116	100
	04.01.M840.20H	**Punta guidafilo M8x40 CUCRZR Ø 2,0**	-	Contact tip M8x40 CUCRZR Ø 2,0	147.020.120	100
3	11.05.RH503	**Diffusore gas Cu**	-	Gas diffuser	118.103.106	10
4	11.03.RH503	**Rondella isolante**	-	Washer	151.105.106	10
5	11.33.RH503	**Portaugello**	-	Gas nozzle holder	150.112.102	5
	11.55.RH503	**Anello elastico**	-	Ring	101.101.103	10
6	11.06.RH503S	**Corpo torcia STD. senza portaugello**	-	Torch head without outside nozzle		1
	11.06.RH503	**Corpo torcia STD. con portaugello**	-	Torch head with outside nozzle	116.116.104	1
	11.07.RH503	**Tubo isolante lancia**	-	Conductor tube insulation	140.104.502	10
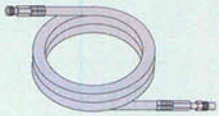	11.21.RH503.3	**Portaguaina MT. 3**	-	Wire conduit MT.3	145.510.301	1
	11.21.RH503.4	**Portaguaina MT. 4**	-	Wire conduit MT.4	145.510.401	1
	11.21.RH503.5	**Portaguaina MT. 5**	-	Wire conduit MT.5		1
	11.24.RH503.3	**Cavo P.C. MT. 3**	-	Power cable MT.3	112.050.301	1
	11.24.RH503.4	**Cavo P.C. MT. 4**	-	Power cable MT.4	112.050.401	1
	11.24.RH503.5	**Cavo P.C. MT. 5**	-	Power cable MT.5		1
	11.30.H02	**Corpo torcia posteriore**	-	Euro connector	142.105.510	1
	11.00.KTH503.3	**Kit di riparazione OH5033**	-	Repairing Kit OH5033		
	11.00.KTH503.4	**Kit di riparazione OH5034**	-	Repairing Kit OH5034		
	11.00.KTH503.5	**Kit di riparazione OH5035**	-	Repairing Kit OH5035		

NEW COIR S.p.A. is in no way affiliated with OCIM®. The parts advertised for sale are not genuine OCIM® parts, but are parts made for and by NEW COIR S.p.A.
Reference to OCIM® machine, torches and numbers are for your convenience only. We reserve the right to substitute genuine OCIM® parts in place of NEW COIR S.p.A. parts.

SPARE PARTS SUITABLE FOR OCIM® **RM 360**

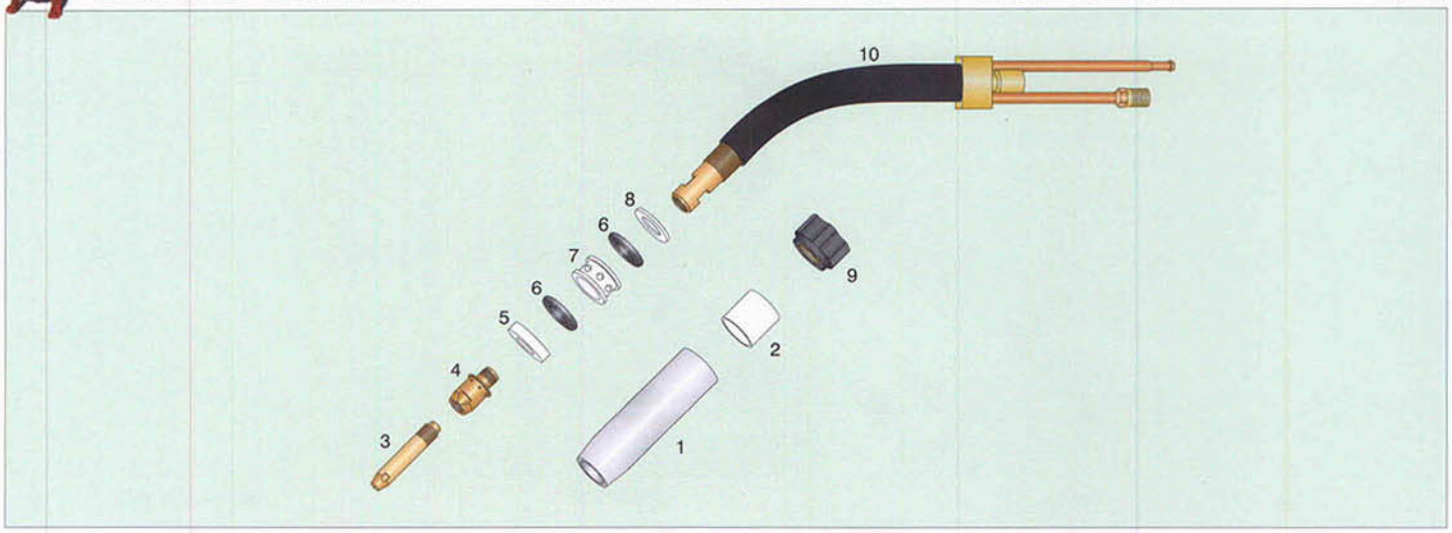

ITEM	Part No		DESCRIPTION			ORIGINAL REF.	PACK
1	11.02.RM360.15		**Ugello gas Ø 15 STD**	-	Gas nozzle Ø 15 STD	179.105.108	10
2	11.31.RM360		**Bussola isolante**	-	Insulator nut	103.102.103	10
3	04.01.M840.08		**Punta guidafilo M8x40 Ø 0,8**	-	Contact tip M8x40 Ø 0,8	147.010.108	100
	04.01.M840.10		**Punta guidafilo M8x40 Ø 1,0**	-	Contact tip M8x40 Ø 1,0	147.010.110	100
	04.01.M840.12		**Punta guidafilo M8x40 Ø 1,2**	-	Contact tip M8x40 Ø 1,2	147.010.112	100
	04.01.M840.08H		**Punta guidafilo M8x40 CUCRZR Ø 0,8**	-	Contact tip M8x40 CUCRZR Ø 0,8	147.020.108	100
	04.01.M840.10H		**Punta guidafilo M8x40 CUCRZR Ø 1,0**	-	Contact tip M8x40 CUCRZR Ø 1,0	147.020.110	100
	04.01.M840.12H		**Punta guidafilo M8x40 CUCRZR Ø 1,2**	-	Contact tip M8x40 CUCRZR Ø 1,2	147.020.112	100
4	11.05.RM360		**Diffusore gas Cu**	-	Gas diffuser	118.103.109	10
5 6 7 6 8	11.33.RM360	5	**Rondella di sostegno isolante**	-	Washer	151.104.106	10
	11.32.RM360	6	**Guarnizione**	-	O-Ring	101.102.206	10
	11.51.RM360	7	**Distributore H2O**	-	Water diffuser	119.101.104	10
	11.34.RM360	8	**Rondella di pressione**	-	Washer	151.103.106	10
10 9	11.03.RM360		**Ghiera corpo torcia**	-	Connector sleeve	127.101.103	1
	11.06.RM360		**Corpo torcia STD**	-	Torch head STD	116.101.109	1
	11.07.RM360		**Tubo isolante lancia**	-	Conductor tube insulation	140.104.107	10
	11.21.RM360.3		**Portaguaina MT. 3**	-	Wire conduit MT.3	145.040.301	1
	11.21.RM360.4		**Portaguaina MT. 4**	-	Wire conduit MT.4	145.040.401	1
	11.21.RM360.5		**Portaguaina MT. 5**	-	Wire conduit MT.5		1
	11.24.RH503.3		**Cavo P.C. MT. 3**	-	Power cable MT.3	112.050.301	1
	11.24.RH503.4		**Cavo P.C. MT. 4**	-	Power cable MT.4	112.050.401	1
	11.24.RH503.5		**Cavo P.C. MT. 5**	-	Power cable MT.5		1
	11.30.H01		**Corpo torcia posteriore**	-	Euro connector	145.105.121	1
	11.00.KTH360.3		**Kit di riparazione OH3603**	-	Repairing Kit OH3603		
	11.00.KTH360.4		**Kit di riparazione OH3604**	-	Repairing Kit OH3604		
	11.00.KTH360.5		**Kit di riparazione OH3605**	-	Repairing Kit OH3605		

NEW COIR S.p.A. is in no way affiliated with OCIM®. The parts advertised for sale are not genuine OCIM® parts, but are parts made for and by NEW COIR S.p.A.
Reference to OCIM® machine, torches and numbers are for your convenience only. We reserve the right to substitute genuine OCIM® parts in place of NEW COIR S.p.A. parts.

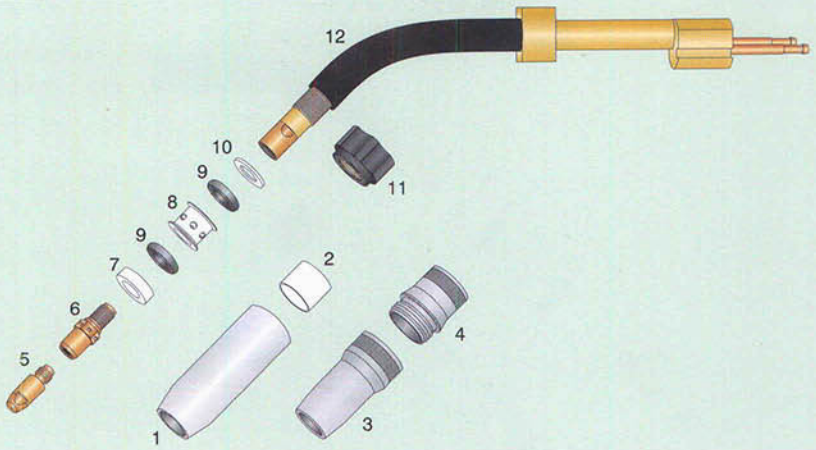

ITEM	Part No		DESCRIPTION		ORIGINAL REF.	PACK
1	11.02.RM552.17		**Ugello gas Ø 17 STD**	- Gas nozzle Ø 17 STD	179.105.109	10
2	11.31.RM552		**Bussola isolante**	- Insulator	103.102.102	10
3 4	11.02.RM552.P		**Ugello posteriore**	- Bushing	179.108.102	5
	11.02.RM552.A		**Ugello anteriore Ø 17**	- Gas nozzle Ø 17	179.102.102	5
5	02.01.M830.10		**Punta gudafilo M8x30 Ø 1,0**	- Contact tip M8x30 Ø 1,0	147.010.310	100
	02.01.M830.12		**Punta gudafilo M8x30 Ø 1,2**	- Contact tip M8x30 Ø 1,2	147.010.312	100
	02.01.M830.16		**Punta gudafilo M8x30 Ø 1,6**	- Contact tip M8x30 Ø 1,6	147.010.316	100
	02.01.M830.20		**Punta gudafilo M8x30 Ø 2,0**	- Contact tip M8x30 Ø 2,0	147.010.320	100
	02.01.M830.10H		**Punta gudafilo M8x30 CUCRZR Ø 1,0**	- Contact tip M8x30 CUCRZR Ø 1,0	147.020.310	100
	02.01.M830.12H		**Punta gudafilo M8x30 CUCRZR Ø 1,2**	- Contact tip M8x30 CUCRZR Ø 1,2	147.020.312	100
	02.01.M830.16H		**Punta gudafilo M8x30 CUCRZR Ø 1,6**	- Contact tip M8x30 CUCRZR Ø 1,6	147.020.316	100
	02.01.M830.20H		**Punta gudafilo M8x30 CUCRZR Ø 2,0**	- Contact tip M8x30 CUCRZR Ø 2,0	147.020.320	100
6	11.05.RM552		**Diffusore gas Cu**	- Gas diffuser	118.103.103	10
7 9 8 9 10	11.33.RM552	7	**Rondella di sostegno isolante**	- Washer	151.104.104	10
	11.32.RM552	9	**Guarnizione O-ring**	- O-Ring	135.101.103	10
	11.51.RM552	8	**Distributore H2O**	- Water diffuser	119.101.103	10
	11.34.RM552	10	**Rondella di pressione**	- Washer	151.103.104	10
12 11	11.03.RM360		**Ghiera corpo torcia**	- Connector sleeve	127.101.103	1
	11.06.RM552		**Corpo torcia STD**	- Torch head STD	116.101.106	1
	11.07.RM552		**Tubo isolante lancia**	- Conductor tube insulation	140.104.109	10
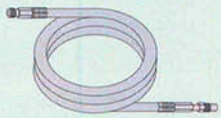	11.21.RM652.3		**Portaguaina MT. 3**	- Wire conduit MT.3	145.030.301	1
	11.21.RM652.4		**Portaguaina MT. 4**	- Wire conduit MT.4	145.030.401	1
	11.21.RM652.5		**Portaguaina MT. 5**	- Wire conduit MT.5		1
	11.24.RM652.3		**Cavo P.C. MT. 3**	- Power cable MT.3	112.020.301	1
	11.24.RM652.4		**Cavo P.C. MT. 4**	- Power cable MT.4	112.020.401	1
	11.24.RM652.5		**Cavo P.C. MT. 5**	- Power cable MT.5		1
	11.30.H03		**Corpo torcia posteriore**	- Euro connector	142.105.119	1
	11.00.KTH552.3		**Kit di riparazione OH5523**	- Repairing Kit OH5523		
	11.00.KTH552.4		**Kit di riparazione OH5524**	- Repairing Kit OH5524		
	11.00.KTH552.5		**Kit di riparazione OH5525**	- Repairing Kit OH5525		

NEW COIR S.p.A. is in no way affiliated with OCIM®. The parts advertised for sale are not genuine OCIM® parts, but are parts made for and by NEW COIR S.p.A.
Reference to OCIM® machine, torches and numbers are for your convenience only. We reserve the right to substitute genuine OCIM® parts in place of NEW COIR S.p.A. parts.

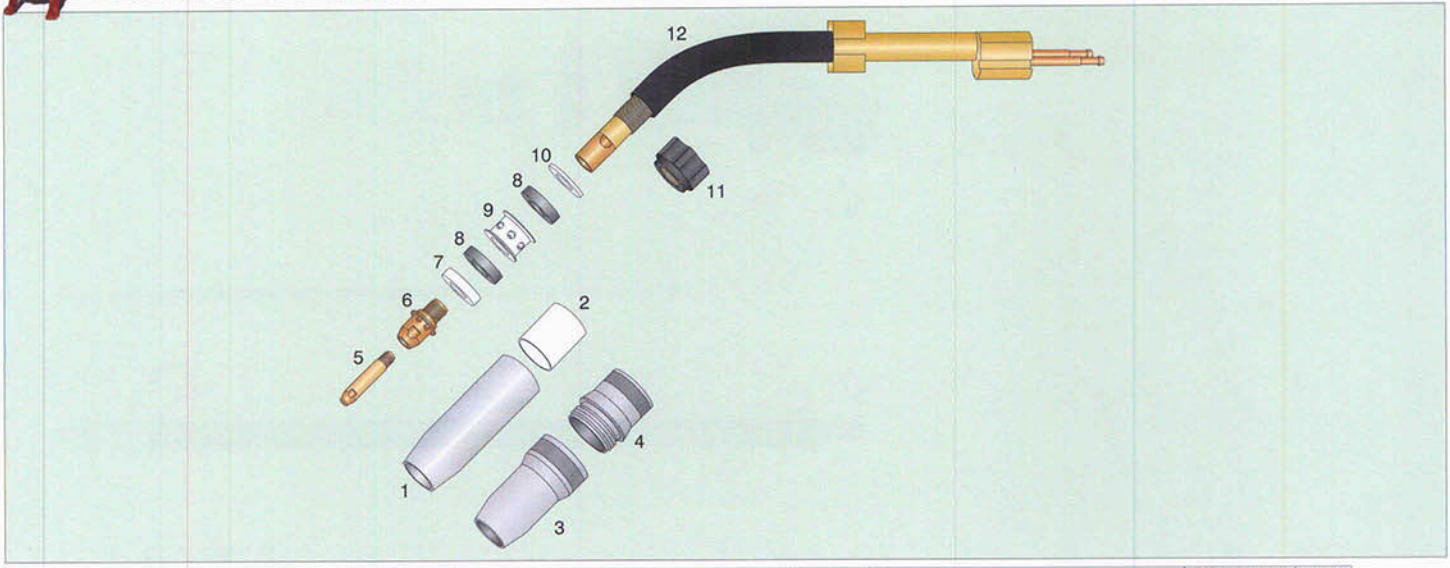

ITEM	Part No		DESCRIPTION		ORIGINAL REF.	PACK
1	11.02.RM652.19		**Ugello gas Ø 19 STD**	- Gas nozzle Ø 19 STD	179.105.107	10
2	11.31.RM652		**Bussola isolante**	- Insulator nut	103.102.101	10
3 4	11.02.RM652.P		**Ugello posteriore**	- Bushing	179.108.101	5
	11.02.RM652.A		**Ugello anteriore Ø 19**	- Gas nozzle Ø 19	179.102.101	5
5	04.01.M840.10		**Punta gudafilo M8x40 Ø 1,0**	- Contact tip M8x40 Ø 1,0	147.010.110	100
	04.01.M840.12		**Punta gudafilo M8x40 Ø 1,2**	- Contact tip M8x40 Ø 1,2	147.010.112	100
	04.01.M840.16		**Punta gudafilo M8x40 Ø 1,6**	- Contact tip M8x40 Ø 1,6	147.010.116	100
	04.01.M840.20		**Punta gudafilo M8x40 Ø 2,0**	- Contact tip M8x40 Ø 2,0	147.010.120	100
	04.01.M840.24		**Punta gudafilo M8x40 Ø 2,4**	- Contact tip M8x40 Ø 2,4	147.010.124	100
	04.01.M840.10H		**Punta gudafilo M8x40 CUCRZR Ø 1,0**	- Contact tip M8x40 CUCRZR Ø 1,0	147.020.110	100
	04.01.M840.12H		**Punta gudafilo M8x40 CUCRZR Ø 1,2**	- Contact tip M8x40 CUCRZR Ø 1,2	147.020.112	100
	04.01.M840.16H		**Punta gudafilo M8x40 CUCRZR Ø 1,6**	- Contact tip M8x40 CUCRZR Ø 1,6	147.020.116	100
	04.01.M840.20H		**Punta gudafilo M8x40 CUCRZR Ø 2,0**	- Contact tip M8x40 CUCRZR Ø 2,0	147.020.120	100
	04.01.M840.24H		**Punta gudafilo M8x40 CUCRZR Ø 2,4**	- Contact tip M8x40 CUCRZR Ø 2,4	147.020.124	100
6	11.05.RM652		**Diffusore gas Cu**	- Gas diffuser	118.103.107	10
7 8 9 8 10	11.33.RM652	7	**Rondella di sostegno isolante**	- Washer	151.104.105	10
	11.32.RM652	8	**Guarnizione**	- O-Ring	135.101.101	10
	11.51.RM652	9	**Distributore H2O**	- Water diffuser	119.101.101	10
	11.34.RM652	10	**Rondella di pressione**	- Washer	151.103.105	10
12 11 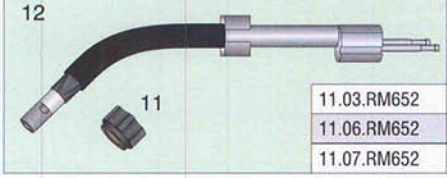	11.03.RM652		**Ghiera corpo torcia**	- Connector sleeve	127.101.104	1
	11.06.RM652		**Corpo torcia STD**	- Torch head STD	116.101.108	1
	11.07.RM652		**Tubo isolante lancia**	- Conductor tube insulation	140.104.110	10
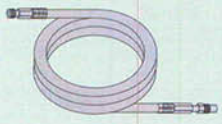	11.21.RM652.3		**Portaguaina MT. 3**	- Wire conduit MT.3	145.030.301	1
	11.21.RM652.4		**Portaguaina MT. 4**	- Wire conduit MT.4	145.030.401	1
	11.21.RM652.5		**Portaguaina MT. 5**	- Wire conduit MT.5		1
	11.24.RM652.3		**Cavo P.C. MT. 3**	- Power cable MT.3	112.020.301	1
	11.24.RM652.4		**Cavo P.C. MT. 4**	- Power cable MT.4	112.020.401	1
	11.24.RM652.5		**Cavo P.C. MT. 5**	- Power cable MT.5		1
	11.30.H03		**Corpo torcia posteriore**	- Euro connector	142.105.119	1
	11.00.KTH652.3		**Kit di riparazione OH6523**	- Repairing Kit OH6523		
	11.00.KTH652.4		**Kit di riparazione OH6524**	- Repairing Kit OH6524		
	11.00.KTH652.5		**Kit di riparazione OH6525**	- Repairing Kit OH6525		

NEW COIR S.p.A. is in no way affiliated with OCIM®. The parts advertised for sale are not genuine OCIM® parts, but are parts made for and by NEW COIR S.p.A.
Reference to OCIM® machine, torches and numbers are for your convenience only. We reserve the right to substitute genuine OCIM® parts in place of NEW COIR S.p.A. parts.